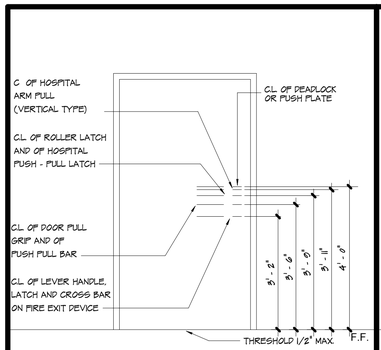

DOOR HARDWARE LOCATIONS

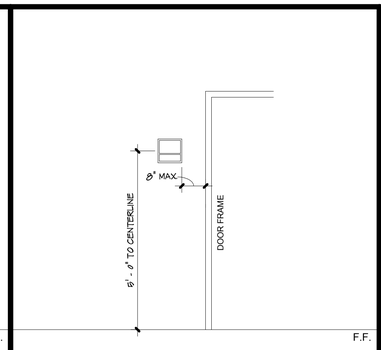

SIGNAGE

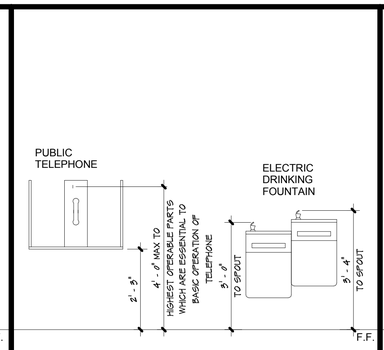

PUBLIC DEVICES

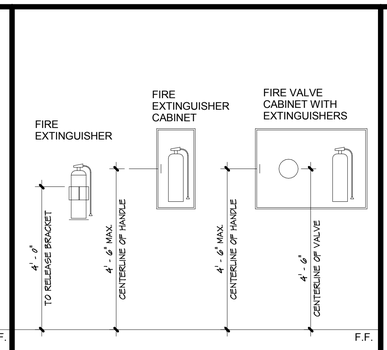

FIRE PROTECTION DEVICES

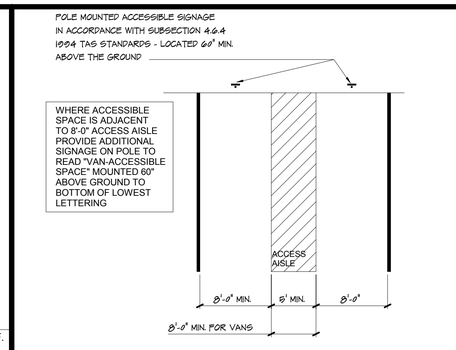

DIMENSIONS OF PARKING SPACES

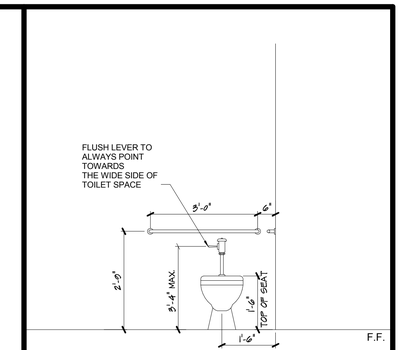

TOILET ACCESSIBLE

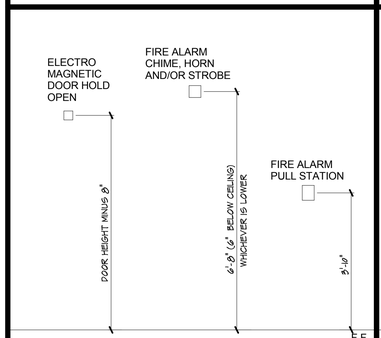

FIRE PROTECTION DEVICES

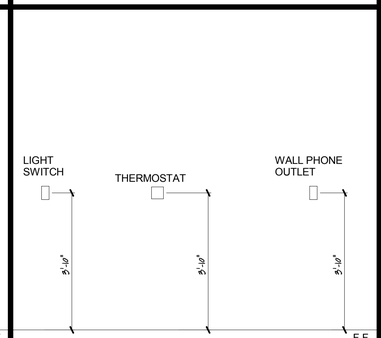

ELECTRICAL / COMMUNICATION DEVICES

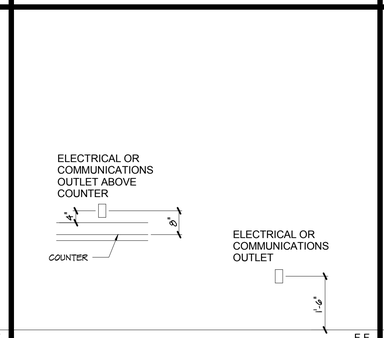

ELECTRICAL / COMMUNICATION DEVICES

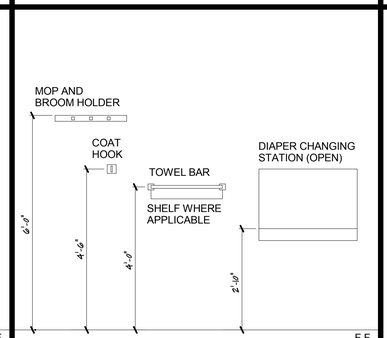

ACCESSORIES

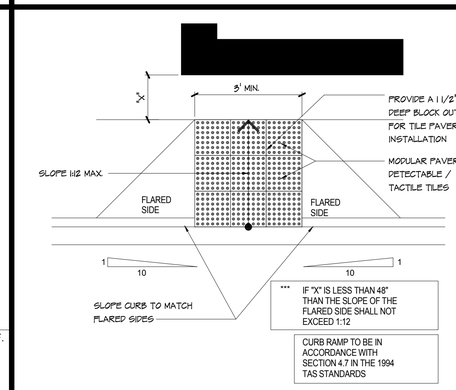

CURB RAMPS

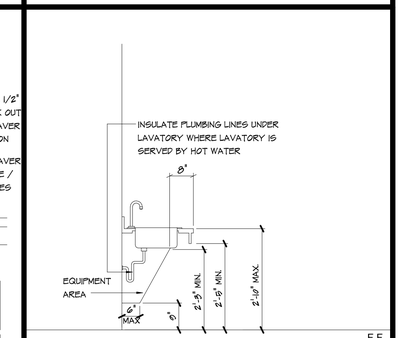

SINK - ACCESSIBLE

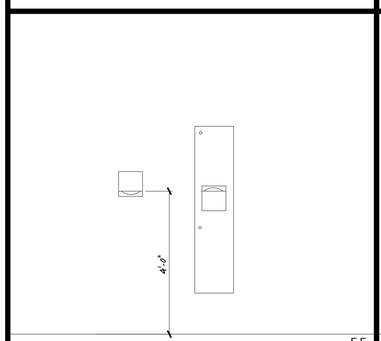

paper towel dispenser

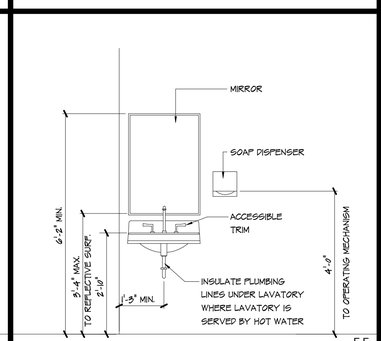

LAVATORY - ACCESSIBLE

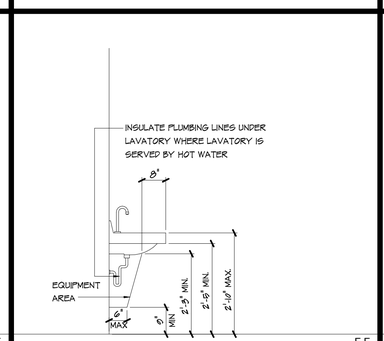

LAVATORY - ACCESSIBLE

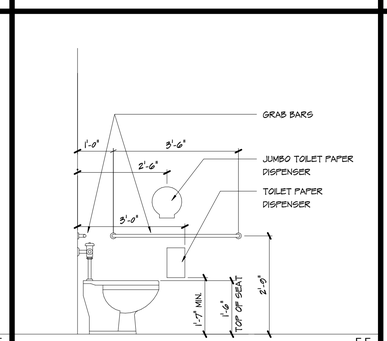

TOILET ACCESSIBLE

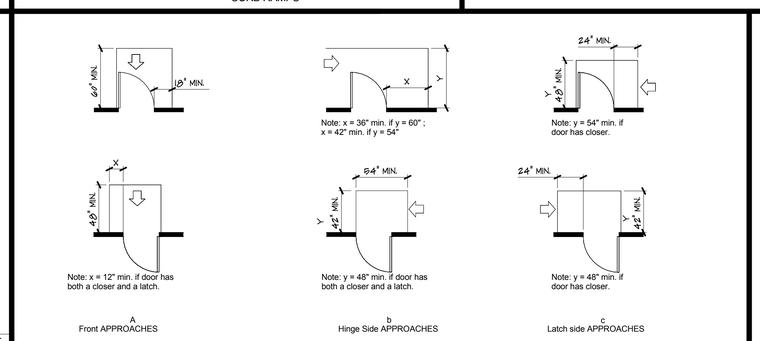

MANEUVERING CLEARANCE AT DOORS

	A NEW PAVILION FOR STEVENS RANCH	SHEET CONTENTS: ACCESSIBILITY	NOVEMBER 17, 2011	D2